ALPHA MICROSYSTEMS
RIGHT. FROM THE START

AM-540
High Performance SCSI Interface Installation Instructions

PDI-00540-01, Rev. A00

© 1995 Alpha Microsystems

REVISIONS INCORPORATED	
REVISION	DATE
A00	March 1994

AM-540 High Performance SCSI Interface Installation Instructions
To re-order this document, request part number PDI-00540-01.

The information contained in this manual is believed to be accurate and reliable. However, no responsibility for the accuracy, completeness or use of this information is assumed by Alpha Microsystems.

This document was written and illustrated by Dan Twaddell.

This document may contain references to products covered under U.S. Patent Number 4,530,048.

The following are registered trademarks of Alpha Microsystems, Santa Ana, CA 92799:

AMIGOS	AMOS	Alpha Micro	AlphaACCOUNTING
AlphaBASIC	AlphaCALC	AlphaCOBOL	AlphaFORTRAN 77
AlphaLAN	AlphaLEDGER	AlphaMAIL	AlphaMATE
AlphaNET	AlphaPASCAL	AlphaRJE	AlphaWRITE
CASELODE	OmniBASIC	VER-A-TEL	VIDEOTRAX

The following are trademarks of Alpha Microsystems, Santa Ana, CA 92799:

AlphaBASIC PLUS	AlphaVUE	AM-PC	AMTEC
DART	ESP	MULTI	inSight/am
inFront/am			

All other copyrights and trademarks are the property of their respective holders.

ALPHA MICROSYSTEMS
3511 Sunflower
P.O. Box 25059
Santa Ana, CA 92799

TABLE OF CONTENTS

1.0 INTRODUCTION 1

2.0 HARDWARE COMPATIBILITY 1
2.1 Software Compatibility 1
2.2 AM-540 SCSI Tape and Hard Disk Drive Requirements 1
2.3 SCSI Dispatcher 5

3.0 UPGRADE YOUR OPERATING SYSTEM FIRST 5
3.1 Protecting Your Data 6
3.2 Warm Boot Ability 6
3.3 Booting from a Floppy Drive 6
3.4 AMOS Operating System Software 7

4.0 WILL YOUR BOOTABLE DRIVE BE CONNECTED TO THE AM-540? 8

5.0 AM-540 INSTALLATION 10

6.0 INSTALLATION VERIFICATION 16

APPENDIX A - SCSI TERMINATION
A.1 SCSI TERMINATION USING EXTERNAL TERMINATOR OPTION A-1
A.1.1 Termination Procedure (Without External Terminator) A-3
A.2 TERMINATOR POWER A-3

APPENDIX B - READ-AHEAD AND WRITE BUFFERING
B.1 INTRODUCTION B-1
B.2 READ AHEAD B-2
B.2.1 Controlling Read-Ahead B-2
B.3 WRITE BUFFERING B-3
B.3.1 Potential Pitfalls B-4
B.3.2 Setting Up Write Buffering B-4
B.4 FINAL NOTES B-5

1.0 INTRODUCTION

The AM-540 board is a high performance SCSI interface designed for the AM-3000M computer. The AM-540's circuitry supports a host of powerful features, which include command queueing, synchronous transfers, multi-threaded, and scatter-gather operations. SCSI peripherals currently connected to the SASI port on your AM-3000M computer will yield a significant performance increase when attached to the AM-540's high performance SCSI port. However, maximum performance is achieved via the use of SCSI-2 devices.

All SCSI devices sold by Alpha Micro as standard or optional equipment for the AM-3000M computer are compatible with the SCSI port on the AM-540 board. Also, some of these devices—e.g., Tandberg AM-626 and AM-627 tape drives, as well as DAT tape drives—are easily converted to SCSI-2 operation. See the section further on in this document dealing with SCSI disk and tape drive requirements.

2.0 HARDWARE COMPATIBILITY

The AM-540 board is compatible with all versions of the AM-3000M's main logic board, the AM-140. All of your current AM-3000M hardware will be AM-540 compatible, with one possible exception. If your configuration includes the AM-121 VPC board, it must be removed in order to install the AM-540 board. It is not possible to use the AM-540 and AM-121 boards in the same computer.

2.1 Software Compatibility

To be AM-540 compatible, your operating system can be no earlier than AMOS 1.4C PR2/94 or AMOS 2.2C PR2/94. You must also use a version of the hardware support software release designed specifically for the operating systems mentioned above.

2.2 AM-540 SCSI Tape and Hard Disk Drive Requirements

In order to take full advantage of the performance potential of your SCSI peripherals, you should carefully read the SCSI tape and disk drive information in this section.

Once the AM-540 board is installed, it effectively disables the AM-140 board's SASI port. SCSI peripherals attached to the J19 SASI port on the AM-140 board will now be attached to the AM-540's high performance SCSI port. Your SCSI peripherals will operate exactly as before—only faster; SCSI peripherals capable of supporting SCSI-2 protocol will be much faster.

Besides better performance, the AM-540 board supports more SCSI devices. The SASI port on your AM-140 board supports only four SCSI IDs (0 through 3). The SCSI port on the AM-540 board supports seven SCSI IDs (0 through 6).

The SASI port on your AM-140 board does not support SCSI-2 devices. Many of the SCSI devices outlined in this section can easily be converted to SCSI-2 operation. Once converted, they will not be functional until connected to the AM-540's SCSI port. For best results, do not convert any of your SCSI peripherals to SCSI-2 until after your computer is up and running with the AM-540 board.

Tandberg 1/4" Streaming Tape Drives

In order to warm boot from a Tandberg streaming tape drive, it must be set to a higher numerical SCSI ID than in other tape device on your computer.

1. In order to be AM-540 compatible, the AM-625 Tandberg 150MB tape drive must have firmware at **revision -06:00 or later**. The AM-625 is a SCSI-1 device; it cannot be upgraded to SCSI-2. AM-625 backups are not able to span tapes.

2. AM-626 525MB Tandberg SCSI tape drives can be upgraded to SCSI-2 by installing updated firmware (part number PDB-00626-90), which is supplied with your AM-540 board. If you do not upgrade the firmware, the drive can still be used on the AM-540 board as a SCSI-1 device, but only if it has firmware at **revision -04:08 or later.**

   To install the firmware PROM, you simply remove the two TORX screws holding the drive's top cover in place; lift off the top cover; gently pry out the old PROM; and install the new PROM. Figure 2 shows the location of the AM-626's firmware PROM:

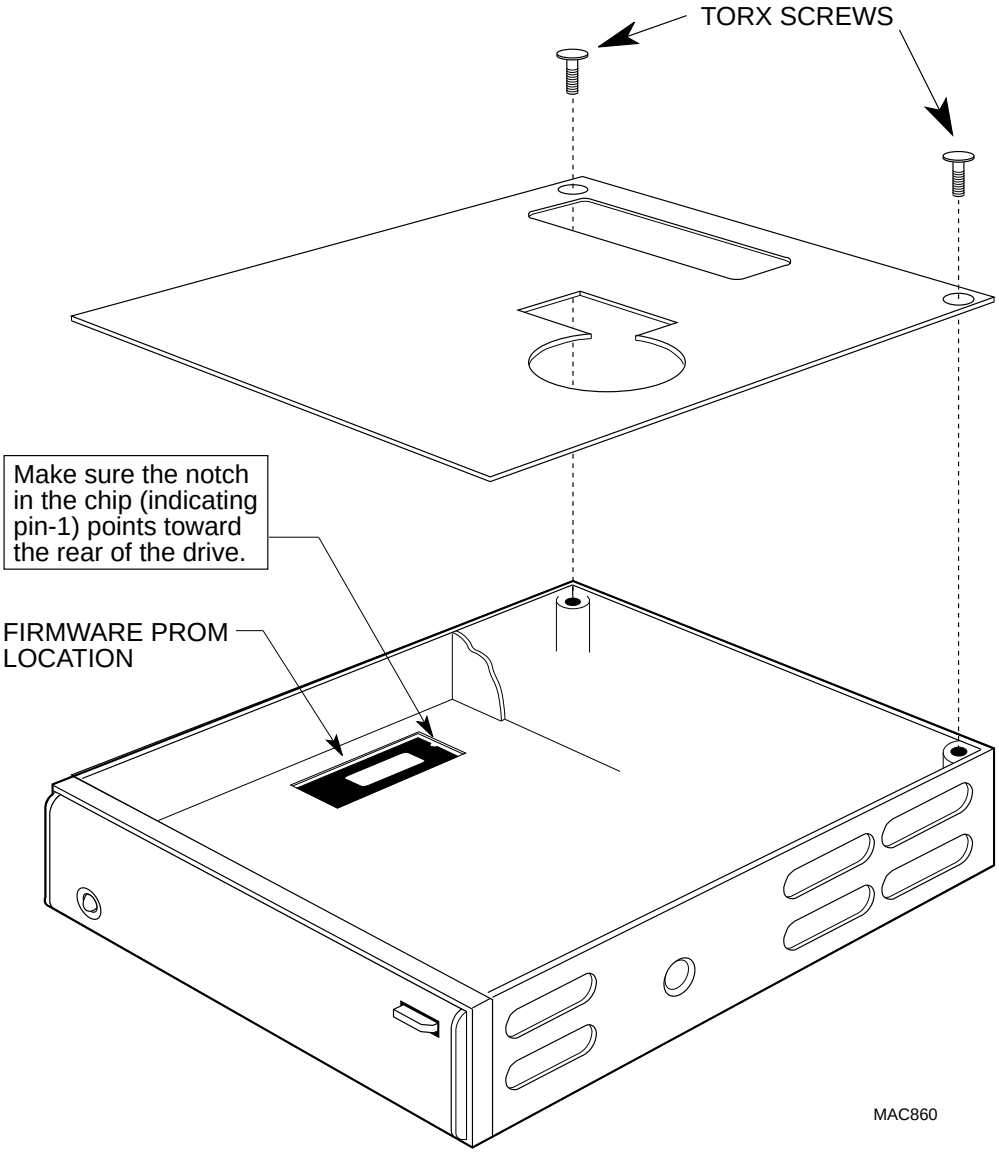

Figure 1. AM-626 PROM Installation

3. AM-627 1GB Tandberg SCSI tape drives also require a firmware update to be SCSI-2 compatible. However, these drives use a flash ROM for their firmware, which can be updated without removing the drive from the computer.

   Once the computer has completed booting, enter the following commands to update the tape drive firmware for SCSI-2 operation:

   LOG OPR: RETURN
   FWUPD DVR:TSCZ2 RETURN

The program will prompt you for the name of the device, enter:

STR0: RETURN

The firmware on the tape drive will automatically be updated for SCSI-2 operation; it takes about one minute and the AMOS prompt will re-appear. In order for the firmware update to take affect, you must power the computer down and then turn the power on again. With the computer up and running, your AM-627 tape drive will now be SCSI-2 compatible.

Once the firmware has been updated, the drive is only compatible with AMOS configurations that support SCSI-2. If the drive is ever used in a configuration that does not support SCSI-2, the firmware must be converted back. To convert back to SCSI-1, follow the same procedure outlined above, but enter the command:

FWUPD DVR:TSCZ1 RETURN

AM-645 8mm Magnetic Tape Subsystem

In order for the Exabyte tape drive to work with the AM-540 board, new firmware must be installed in the drive. The updated firmware is available from Alpha Micro under part number PDB-00645-90. Once the new firmware is installed, the Exabyte tape drive will operate in SCSI-1 mode only. The ability to span tapes is not supported on the Exabyte tape drive.

AM-647 DAT Magnetic Tape Subsystem

The DAT tape drive is SCSI-2 ready and does not require any firmware updates to be compatible with the AM-540 board. However, on the back of the DAT drive, a change needs to be made to one of the configuration switches. Switch S4 needs to be placed in the "ON" position in order for the drive to operate in SCSI-2 mode.

After making a configuration switch change, you must turn the drive off and then power the drive back on in order for the switch change to take affect.

SCSI Hard Disk Drives

Both SCSI-1 and SCSI-2 disk drives are supported on the AM-540's high performance SCSI port. However, while SCSI-1 drives are compatible, the performance yield is significantly less than the SCSI-2 compatible disk drives. If you have a Maxtor MXT series 540MB or 1.2GB SCSI disk drive in your computer, it must have a sticker indicating it has special 6F+ firmware or it must be using 1.5 or later production firmware in order to function with the AM-540 board.

Under AMOS 2.2 (or later) operating systems, you can divide your hard disk drive into logical splits larger than 32MB. In fact, you could take a 540MB drive and make it one giant 540MB logical. While this is perfectly acceptable, you may get a memory allocation error when running programs that load a copy of the bitmap into your memory partition—e.g., DSKANA and MONTST. To use these types of programs, you will need at least one job on your computer with enough memory allocated to allow you to load the large bitmap. Depending on the size of the logical device, you may need a memory partition between 100 and 800KB.

There is an optional read-ahead and write buffering feature you can enable to enhance the performance of SCSI hard disk drives connected to the AM-540. This feature is described in Appendix B.

2.3 SCSI Dispatcher

In order to use the AM-540's on-board high performance SCSI controller, you must define the "SCSI Dispatcher" in your system initialization command file. AMOS uses the dispatcher to communicate with the SCSI controller chip. All communications with the SCSI controller chip are handled by the dispatcher.

There are two versions of the SCSI dispatcher. SCZ190.SYS is a high performance SSD protected version of the SCSI dispatcher, which supports command queueing, synchronous transfers, multi-threaded, and scatter-gather operations. SIM190.SYS is a simplified version of the SCSI dispatcher, which is not SSD protected and does not support the high performance features supported in SCZ190.SYS. SIM190.SYS is used when making warm boot tapes and for temporary situations with computers which do not have an SSD chip. While both of these dispatchers support SCSI-2 devices, there is a tremendous performance increase using the SCZ190.SYS dispatcher.

See Section 4.0 for information on how to install the SCSI dispatcher and enter its SSD PIC code.

If you have any SCSI peripherals attached to the AM-540's SCSI port, you must define the dispatcher, regardless of whether you are using SCSI-1 or SCSI-2 peripheral devices.

3.0 UPGRADE YOUR OPERATING SYSTEM FIRST

If your computer is already running from an AM-540 compatible AMOS operating system, skip forward to the AM-540 installation section.

The installation of the AM-540 board is a simple procedure, but in order to minimize any problems, it is important to do things in proper sequence. Before you begin the process of installing the hardware, you must first download and configure an AM-540 compatible AMOS operating system. You want to be certain your computer is fully operational with the new operating system before installing the AM-540.

3.1 Protecting Your Data

When doing any upgrade to your computer, you want to be absolutely sure you have a recent and complete system backup. While it is very unlikely data stored on your hard disk drive would be corrupted when upgrading your computer—you should be prepared for anything. **Before you loosen the first screw or download any new software, make sure all your data is copied onto some form of backup media.** Make sure you are able to read the data on your backup media; you want to be absolutely sure the data on your backup media is both readable and restorable.

3.2 Warm Boot Ability

A warm boot tape allows you to access the computer in situations where you are not able to boot from the hard disk drive. When doing an AM-540 upgrade, you'll be modifying the system initialization command file and using the MONGEN program to embed a new driver in your AMOS monitor. Either of these two operations, if done incorrectly, could result in a computer that won't boot. If you have a warm boot tape, you will be able to access your hard disk drive and correct the situation which prevented you from booting. Without a warm boot tape, it will be much more difficult to access the computer and correct the problem on the hard disk drive. See the *Systems Commands Reference Manual* for information on how to create a warm boot monitor and a bootable tape.

A warm boot tape designed to boot a SCSI drive attached to the AM-140 board's SASI port will not be functional after the AM-540 board is installed.

3.3 Booting from a Floppy Drive

If your computer includes a floppy drive, it can be configured as a boot device. A floppy drive makes an excellent alternate boot device and may prove invaluable should your hard disk drive fail to boot.

To boot from a diskette, you must reconfigure the AM-140's boot switch, selecting your floppy drive as the boot device. The floppy drive can be configured as either the main or alternate boot device following the instructions in your computer owner's manual. Even though the entire AMOS release will not fit on a single diskette, you can create a bootable diskette by copying only files essential for booting and minimal operation onto the diskette. Once you copy the necessary files onto the diskette, you must use the MONGEN program to create a bootable monitor. AMOS contains two special drivers designed for making bootable diskettes using the MONGEN program:

- BMIN.DVR is used for creating a bootable diskette for computers using 5-1/4" half-height floppy drives.
- BFLP.DVR is used for creating a bootable diskette for computers using 3-1/2" floppy drives.

Don't forget that the system initialization command file on the diskette must be updated to designate the floppy drive as the boot device.

3.4 AMOS Operating System Software

This section gives you a brief overview of how to download and configure your AMOS operating system. For more detailed instructions, see the release notes provided with the software.

Unless you are already running an AMOS 1.4C (or later) or 2.2C (or later) software release that is AM-540 compatible, you will need to update your operating system. You will want to install and configure the operating system **before you install the AM-540 board**. Load the AM-540 compatible operating system and corresponding hardware support tape onto your computer's hard disk drive, following the instructions in the AMOS release notes supplied with the software. Once the software is loaded, you'll need to:

- Use the MONGEN program to load your generic boot device driver into the new monitor—e.g., use SCZDVR.DVR if you are booting from a SCSI drive; use 522DVR.DVR if you are booting from an ESDI drive.

- If you are using a DAT drive, you must log into the DVR: account and type:

  `COPY DAT.DVR=647DVR.DVR` RETURN

- If you are using an AM-626 or AM-627 Tandberg tape drive, you must log into the DVR: account and type:

  `COPY STR.DVR=625DVR.DVR` RETURN

- If you are using an AM-645 Exabyte tape drive, you must log into the DVR: account and type:

  `COPY MTX.DVR=645DVR.DVR` RETURN

  Once you execute the above copy command, the AM-645 tape drive will not be operational until you install the AM-540 board. Also, unlike the previous AM-645 driver, 645DVR.DVR is not SSD protected.

After the software has been configured, make sure your computer is fully functional. Reboot the computer and do a complete check of all the hardware on your computer—e.g., printers, magnetic tape drives, network hardware (if applicable), etc. After you are satisfied all the hardware is working properly with the new operating system, read the next section that discusses AM-540 related changes to your system initialization command file and AMOS monitor. If your computer boots from a SCSI drive, you will need to make these changes before powering down your computer and installing the AM-540 board.

4.0 WILL YOUR BOOTABLE DRIVE BE CONNECTED TO THE AM-540?

If your AM-3000M computer uses only SCSI peripherals, including the bootable drive, there are some additional configuration steps that need to be completed **before you turn the power off and install the AM-540 board**. If your computer boots from an ESDI drive, you can perform the steps outlined in this section either before or after the AM-540 board is installed.

Instructions outlined in this section require that you directly modify your AMOS32 monitor, as well as your AMOS32 system initialization command file. These files are being modified directly to allow the computer to boot from the new AM-540 board once it is installed. This is why it is so important to have a bootable tape or some other means of accessing your hard disk drive should a problem arise.

1. The high performance features incorporated into the AM-540 board require more queue blocks. You need to increase the queue block parameter in the system initialization command file in order to support the AM-540 board.

   Use this formula to determine your new queue block requirement:

   ```
   NEW QUEUE BLOCK REQUIREMENT = OLD QUEUE BLOCKS + (13 x THE NUMBER
   OF JOBS)
   ```

   For example, if the QUEUE statement in your system initialization command file is currently set to 200 and the JOBS statement is set to 50, the resulting formula would look like this:

   ```
   NEW QUEUE BLOCK REQUIREMENT = 200 + (13 x 50)
   ```

   For the example, the QUEUE statement would now be set to 850 to accommodate the AM-540 board.

2. If you are booting from a SCSI disk drive or have any SCSI peripheral connected to the AM-540 board, you need to define the SCSI dispatcher in your system initialization command file.

   In order to install the dispatcher, the command:

   ```
   SCZDSP SCZ190
   ```

   must be entered in the system initialization command file **after** the TRMDEF statements, but **before** the first DEVTBL command.

For example:

```
:T
JOBS 1
JOBALC JOB1
;
TRMDEF TERM1,AM540=0:19200,AM62A,100,100,100,EDITOR=15
VER
SCZDSP SCZ190.SYS
;
DEVTBL DSK1,DSK2
```

Once the dispatcher has been defined in your AMOS32.INI file, you must code the SCSI dispatcher to allow it to run on your specific system.

Once you enter the product installation code (PIC), the product overlay file is forever modified and will not accept a new PIC. This can be a problem if you happen to enter an incorrect PIC. As a safeguard, make a copy of the dispatcher overlay file before you do the SSD encodement. Type:

COPY SCZDSP.SAV=SCZDSP.OVR RETURN

By saving an unmodified version of the overlay file, you will be able re-enter the PIC if necessary.

To perform the SSD encodement, enter the following commands:

LOG SYS: RETURN
SCZPIC RETURN

You will be prompted for a Product Installation Code (PIC).

This PIC is a unique identifier for your system that must be obtained from Alpha Micro. Enter the PIC, carefully verifying you have entered it correctly and press RETURN.

After a brief pause, you will be returned to AMOS command level and you can proceed with the remainder of the installation. If you see the error message `?Improper SSD` after you have rebooted the computer, it probably means you have entered the PIC incorrectly. As mentioned above, you cannot SSD encode the same overlay twice; to re-encode the dispatcher software, do this command first:

COPY SCZDSP.OVR=SCZDSP.SAV RETURN

You will now be able to re-encode the dispatcher. If after once again rebooting the computer you still receive the same error, check with your dealer to make sure the correct PIC was supplied for your computer.

There is an optional read-ahead and write buffering feature you can enable to enhance the performance of SCSI hard disk drives connected to the AM-540. This feature is described in Appendix B.

3. If your computer boots from an ESDI drive, skip forward to the section which describes the AM-540 board installation process. If you are booting from a SCSI drive, you need to embed a new driver into the monitor, **before turning off the computer and installing the AM-540 board.**

   Use the MONGEN program to embed the AM-540 SCSI compatible hard disk driver into the AMOS monitor located in account [1,4].

   For Example:

```
LOG SYS: RETURN

MONGEN RETURN

Input monitor name:  AMOS.MON RETURN
New disk driver: SCZ190.DVR RETURN
New language definition table name: ENGLSH RETURN
New monitor name: AMOS32.MON RETURN

SAVE AMOS32.MON RETURN
```

Once you have embedded the AM-540 SCSI driver into the monitor, the computer is ready for the AM-540 board. Because the monitor is now compatible with the AM-540 board, the computer will not boot if you press the reset button before the AM-540 board is installed.

5.0 AM-540 INSTALLATION

Prior to handling the AM-540 Board or any computer hardware, GROUND YOURSELF. The best ground is the chassis cabinet that houses the hardware. Touch the cabinet prior to picking up, installing, or removing any hardware. Do not unplug the AC power cord from the cabinet, but make sure the power switch is turned OFF. Unplugging the computer cabinet isolates it from common earth ground, leaving it vulnerable to static discharge.

The following procedure explains the process of installing the AM-540 board onto your AM-140 board. Before installing the hardware, make sure your bootable disk drive, either ESDI or SCSI, has been loaded with an AM-540 compatible AMOS operating system as described earlier in this document.

Part of the procedure for installing the AM-540 board involves disabling the SASI port on the AM-140 board. Once the AM-540 board is installed, all SCSI peripherals will be attached to the AM-540 board's J6 connector. The SASI port on the AM-140 board will no longer be operational.

1. In order to install the AM-540 board, the side panel on your AM-3000M computer must be removed. Instructions for removing the side panel are included in your *AM-3000M Owner's Manual.*

2. Once the side panel has been removed, the AM-140 board will be exposed.

3. The AM-140 board's 68030 CPU chip (located at U144) must be removed from its socket. Figure 2 shows the location of the MC68030 CPU chip. To remove the chip, **gently** pry the chip loose using a small flat blade screw driver. Work around the chip lifting from corner to corner and side to side until the chip pops loose from the socket. Don't rush this operation; if too much force is used, you could break some of the pins or the ceramic case on the CPU chip.

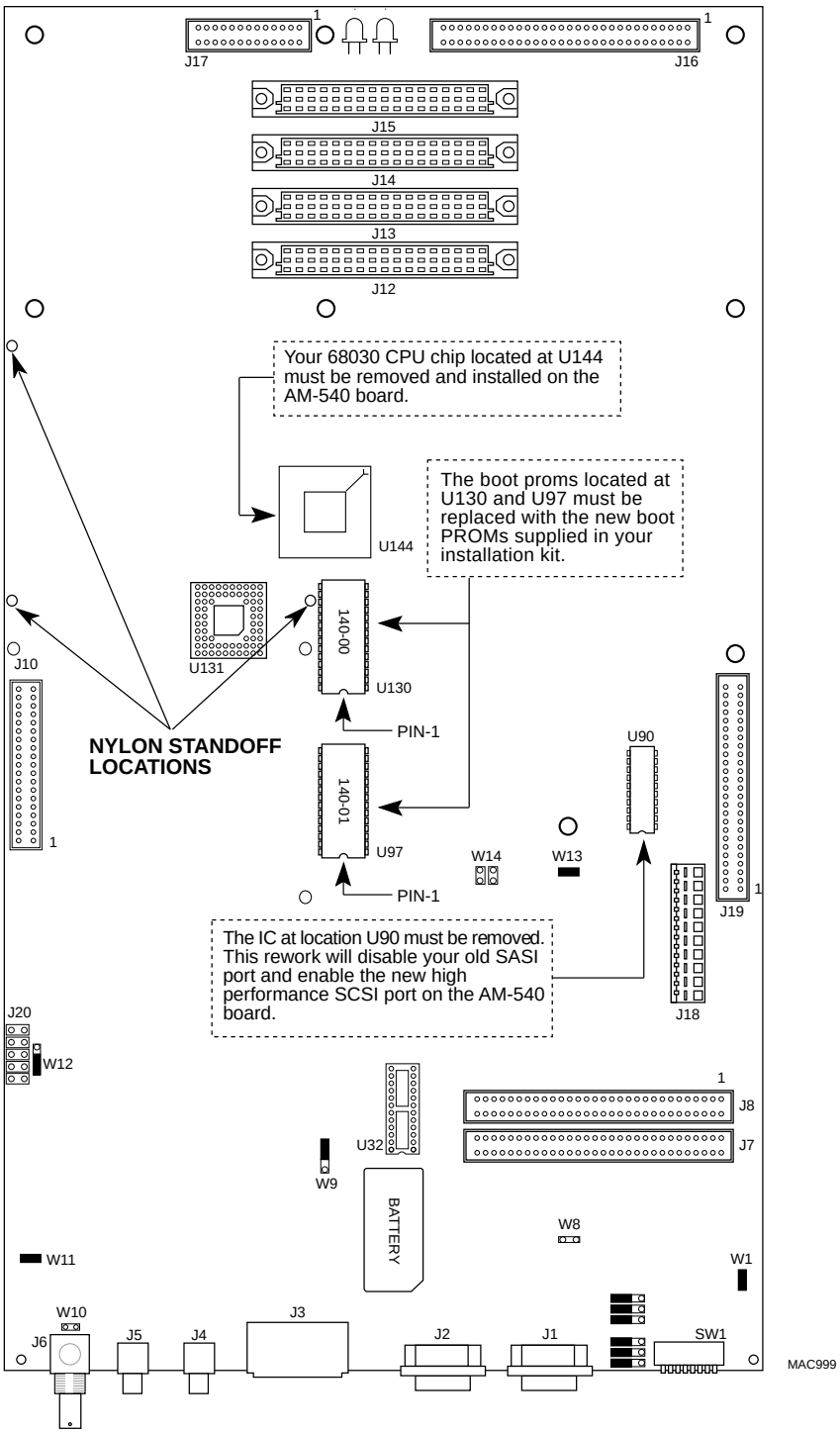

Figure 2. AM-140 Board

4. The AM-140 boot proms (shown in Figure 2 at locations U130 and U97) must also be removed. Your installation kit includes new boot PROMs designed to support the AM-540 board. Like the CPU chip, the boot PROMs can be gently pried from their sockets using a small flat blade screw driver.

5. Once the old boot PROMs have been removed, install the new boot PROMs included in your installation kit. The PROM marked 140-00 installs at location U130; the PROM marked 140-01 installs at location U97. Make sure the PROMs are installed with the notch, which indicates pin-1, oriented as shown in Figure 2.

6. Before the AM-540 board is installed, you must first install the MC68030 CPU chip (removed from the AM-140 board) on the AM-540 at location U14. Make sure pin-1 on the CPU chip is oriented exactly as shown in Figure 3.

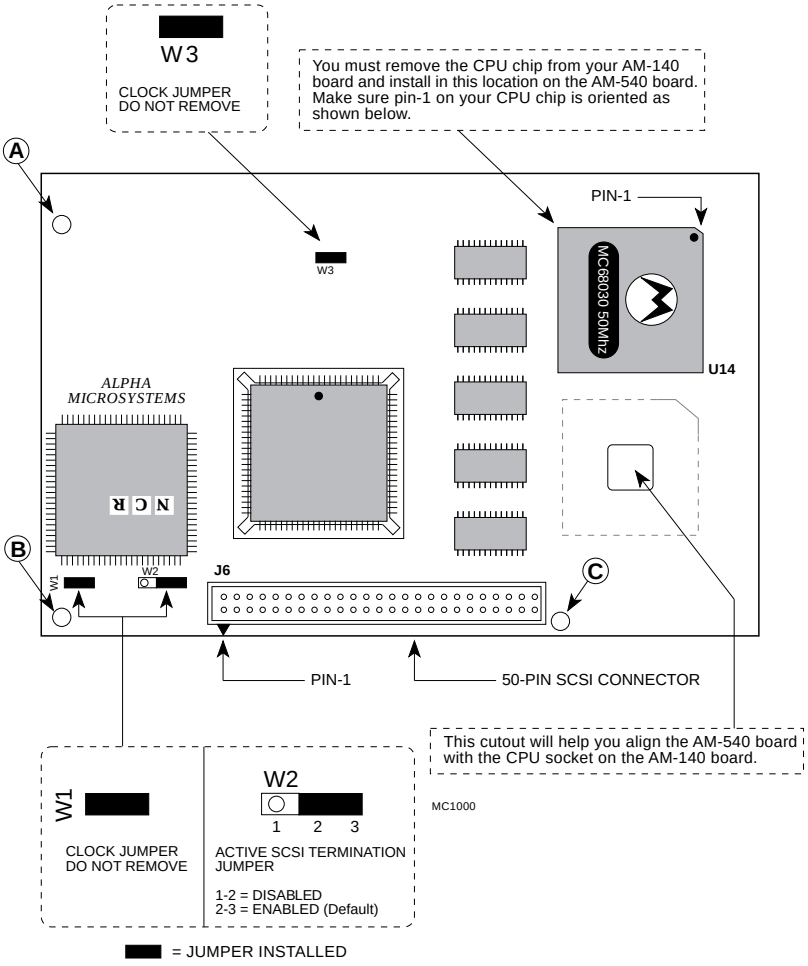

Figure 3 — AM-540 Board

7. Before placing the AM-540 board in position on top of the AM-140, make sure the jumpers are configured exactly as shown in Figure 3.

8. An additional CPU socket has been factory installed on the bottom of the AM-540 board. This socket gives the AM-540 board added clearance so that it does not come in contact with other components on the AM-140 board.

When installing the AM-540 board, make sure all the pins are properly aligned. If you plug the board in incorrectly, it is possible to short power to ground, resulting in possible damage to both AM-540 and AM-140 boards.

9. At this point, your AM-540 board should be ready to install. The AM-540 board sets on top of the AM-140 board, plugging into the CPU socket at location U144. Figure 4 shows the AM-540 board sitting in position on the AM-140 board. The AM-540 board has a cutout that makes it easy to align it with the CPU socket on the AM-140 board. Place the AM-540 board into position, using the cutout to align the pins with the socket. The three nylon standoffs (shown in Figure 2) used to secure the AM-540 board to the AM-140 can also be used as alignment indicators. With everything properly aligned, the three standoffs should be perfectly centered in their respective mounting holes in the AM-540 board; if they are not, the board is not properly positioned and damage may result if you attempt to press the AM-540 into the CPU socket on the AM-140 board. If everything is lined-up properly, you will feel the board settle into position on the socket. This is another operation where it is best to take your time and be sure the AM-540 is properly aligned with the CPU socket on the AM-140. When you're sure the AM-540 board is properly positioned, gently press the AM-540 board into the socket on the AM-140 board.

10. Figure 3 shows three mounting holes in the AM-540 board (called out as A, B, and C) designed to secure the AM-540 to the AM-140 board. These mounting holes align with three nylon standoffs on the AM-140 board. There are three nylon (4-40 by .25) screws included in your installation kit that must be inserted through the mounting holes and threaded into the standoffs. Do not over tighten the screws.

11. After the AM-540 board has been installed, you will need to disconnect your 50-pin SCSI interface cable currently plugged into connector J19 on the AM-140 board. The cable will now be plugged into connector J6 on the AM-540 board. If your 50-pin cable is not long enough to reach connector J6 on the AM-540 board, a special 50-pin extender cable is included in your installation kit. Installation of the extender cable is explained in Figure 4. Make sure all cable connections are made pin-1 to pin-1.

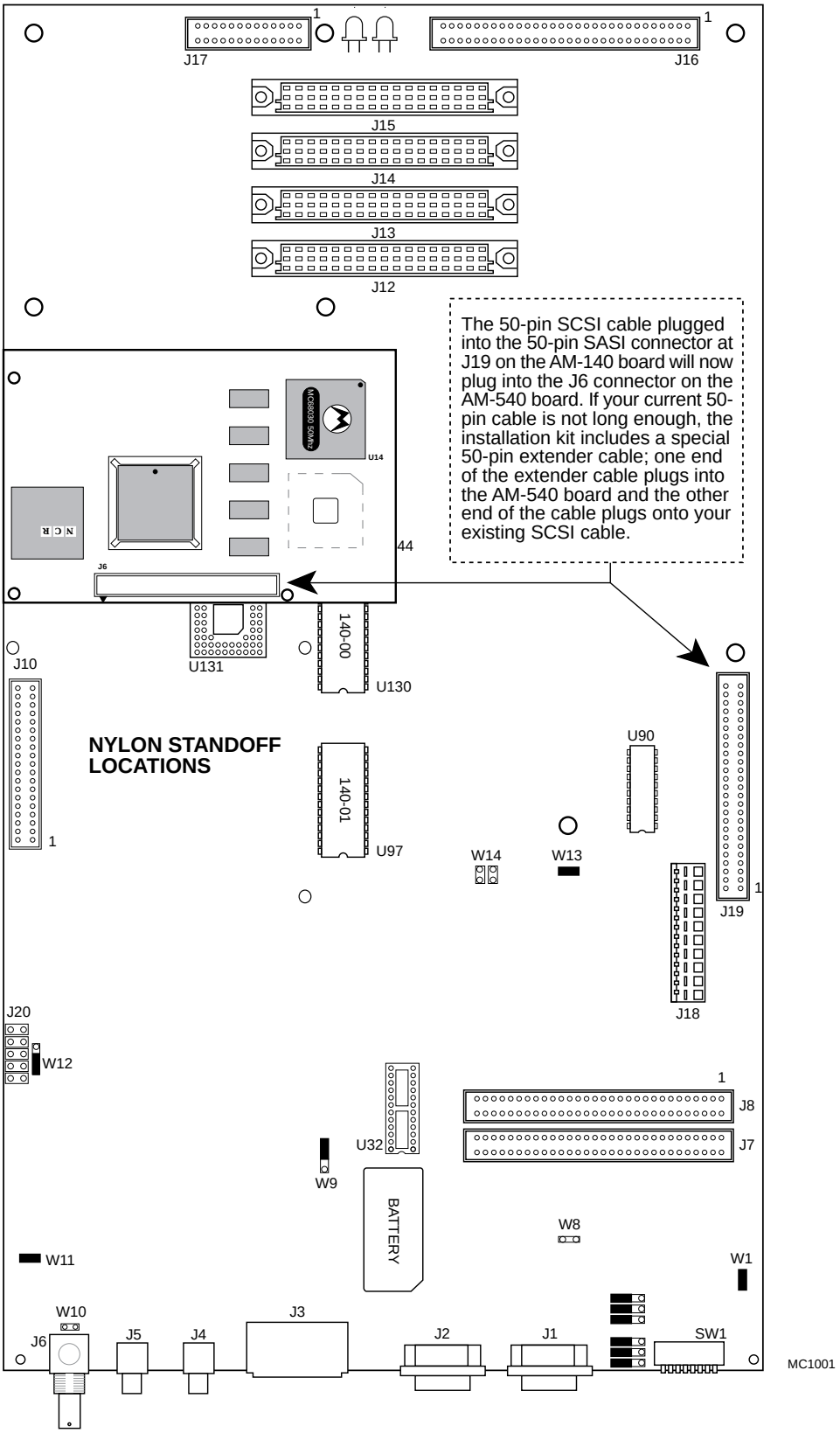

Figure 4 — AM-540 Positioned on AM-140 Board

12. The last step in the hardware installation process is to disable the SASI port on the AM-140 board. This is done by removing the IC located at U90 on the AM-140 board. The location of the IC is shown in Figure 2. To remove the IC, cut all 20 pins holding the IC to the board as shown in Figure 5. Make sure the pins are cut through completely; you don't want to lift any of the solder pads when you remove the chip. Once the chip is removed, the SASI port on the AM-140 board is disabled.

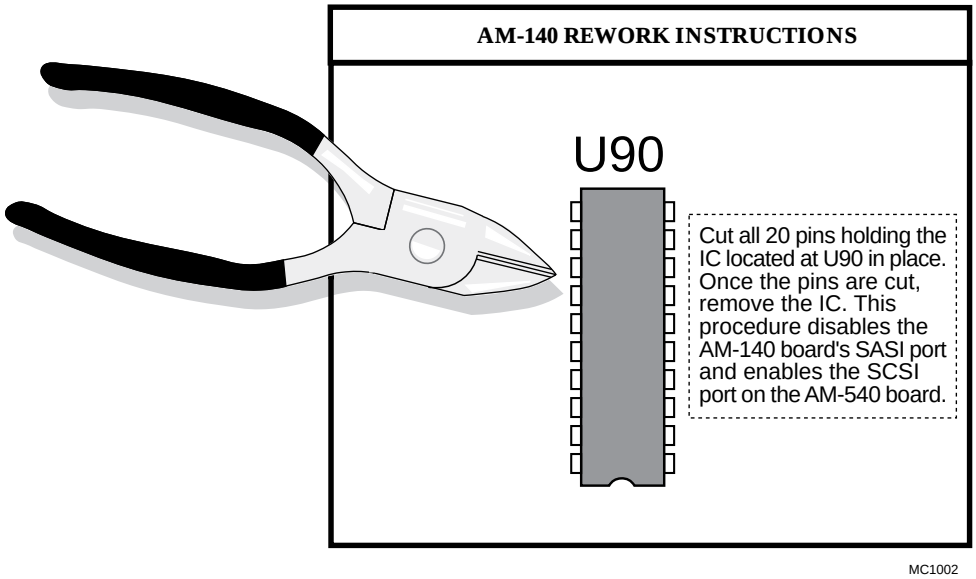

Figure 5. Disabling the SASI Port

13. It is very important that the SCSI bus on the AM-540 board be terminated properly. Before turning on the power to test your new AM-540 board, read the information in Appendix A that describes proper SCSI bus termination.

6.0 INSTALLATION VERIFICATION

Once you have completed your installation, you will need to verify that your computer is bootable and fully functional:

1. Make sure any hardware or cabling disconnected during the installation process is reconnected before you power-up your system.

2. Turn the power switch to the on position.

3. Watch your terminal screen and insure that as the system boots no errors occur while the system is processing the system initialization command file.

4. After the system boots, it never hurts to perform a REDALL on all the logical disk devices on your system.

5. If for some reason your system doesn't boot, use the internal self-test diagnostics described in your computer owner's manual. Also, recheck your installation and make sure you have correctly followed all the instructions.

APPENDIX A

SCSI TERMINATION

A.1 SCSI TERMINATION USING EXTERNAL TERMINATOR OPTION

The preferred method of terminating the SCSI bus in an AMOS based computer is the installation of an external terminator. In Early April of 1993, the external SCSI bus terminator became standard on all AMOS based computer configurations. Using an external terminator makes the task of installing an add-on subsystem (like a portable CD-ROM drive) easier, eliminating the necessity of removing terminators from a SCSI device located in the host computer.

The AM-540 board is sensitive in regards to SCSI bus termination. If you are using the external terminator and one of the SCSI devices inside your computer also has its terminators installed, you will experience problems.

The SCSI bus must be terminated at each end of the cable. The AM-540 terminates the SCSI bus at one end of the 50-pin interface cable. Termination at or close to the other end of the SCSI bus is required, either via an external terminator or via a terminator installed on the SCSI peripheral at the end of the bus.

External terminators are available from Alpha Micro under part number PRA-00222-00.

To use the external terminator, you need to insure none of your SCSI peripherals inside the computer are terminated. You will also need to follow the guidelines in the section on providing termination power for the SCSI bus.

The external terminator is shown in Figure A-1:

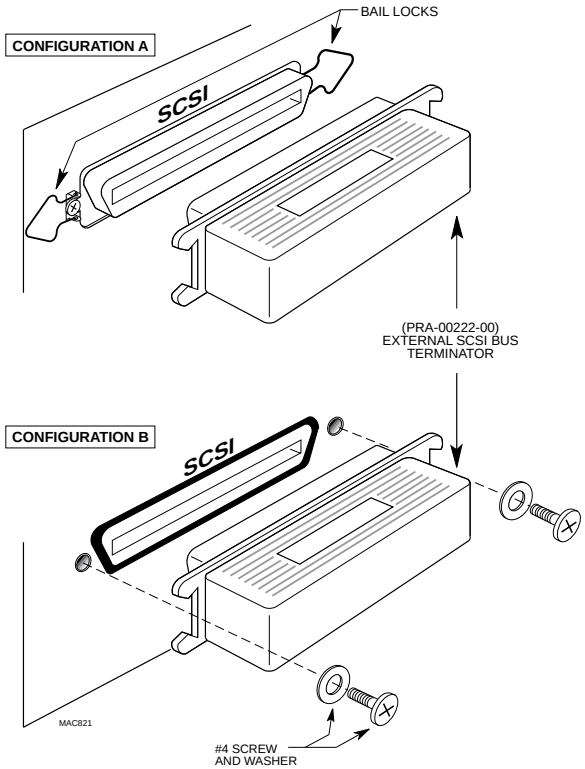

Figure A-1. External Terminator Installation

Figure A-1 shows two different types of external SCSI connectors.

1. "Configuration "A" shows an extended external SCSI connector and bail locks for holding the terminator in place. This configuration is used AM-990 computer cabinets. The terminator is installed by sliding it over the connector and then latching the bail locks into the notches in the terminator.

2. "Configuration "B" shows a flush mounted external SCSI connector. The only product Alpha Micro currently offers using a flush mounted external SCSI connector is the pedestal (also known as the "Classic") chassis. In this configuration, the terminator inserts into a cutout in the sheet metal and over the SCSI connector. The terminator is held in place with two #4 screws and washers.

A.1.1 Termination Procedure (Without External Terminator)

1. For all AM-3000M computers, the last SCSI device attached to the connector farthest down the cable away from the CPU board must have its terminators installed. If only one SCSI device is installed, that device must be terminated.

2. For subsystem installations, the last SCSI device attached to the connector farthest down the cable away from the host computer must have its terminators installed.

A.2 TERMINATOR POWER

In order to properly terminate the SCSI bus, one of the SCSI peripherals must be configured to supply termination power to the SCSI bus.

Use the following guidelines to determine which peripheral will be used to supply termination power for the SCSI bus:

1. Whenever possible, only one SCSI peripheral will be configured to supply termination power to the SCSI bus.

2. If a computer has more than one SCSI peripheral and at least one of those peripherals is a disk drive, one disk drive will be configured to supply termination power to the bus. The other disk or tape SCSI devices will be configured so they do not supply termination power.

3. If a computer does not have a SCSI disk drive, but does have one or more SCSI magnetic tape or CD-ROM drives, then one of these devices will be configured to supply termination power.

4. If a computer with one or more SCSI peripherals is cabled to a subsystem with additional SCSI devices, one SCSI device in the host computer would normally be configured to supply termination power for the bus.

   You should avoid having a SCSI device in both the host computer and the subsystem configured to supply termination power. Ideally, you want the source of the termination power for the bus to be supplied by **one power source**.

For information on how to configure terminator power, see the following documents:

- *SCSI Disk Drives Installation Instructions,* PDI-00436-20, revision A12 or later.

- ∞∞*AM-625/626/627 SCSI 1/4" Streaming Tape Drive Installation Instructions*, PDI-00625-00, revision A05 or later.

- ∞∞*AM-647 DAT Tape Drive Installation Instructions,* PDI-00647-00, revision A02 or later.

APPENDIX B

READ-AHEAD AND WRITE BUFFERING

B.1 INTRODUCTION

In the past, AMOS systems achieved high levels of performance by using a "Herbie" style disk controller (such as the AM-522) to offload a large portion of the overhead associated with disk access. One additional benefit of this offloading, is that extra cycles are available on the Herbie controller to perform functions such as read-ahead and write buffering. Both of these schemes are used by the current AM-522 firmware, but cannot be used on other non-intelligent interfaces such as the Alpha Micro SASI interface because the main processor running AMOS has to handle control of the SASI interface, stealing CPU cycles away from other resources, such as the terminal service system and user jobs.

In the case of the AM-540 board, a "hybrid" Herbie style controller has been implemented. A programmable RISC controller is used for SCSI bus communications and for data transfer to and from the AM-540's SCSI bus. The 68030 CPU is only involved with setup before and cleanup after a SCSI command is sent to a device—the rest of the command, including data transfer, is handled by the RISC processor.

Having the RISC processor take care of these details, allows us to implement both read-ahead and write buffering without the need for a separate Herbie controller. Also, higher levels of performance will be seen when using a fast SCSI-2 disk drive than with an AM-522 using ESDI drives for the following reasons:

- Physically, SCSI-2 drives are faster than most ESDI drives. They spin the platters twice as fast (reducing latency) and have significantly faster seek times.

- Data transfer rates are higher with fast SCSI-2 drives. ESDI drives have a maximum transfer rate of 18Mbits/s, whereas fast SCSI-2 drives transfer data at 10Mbytes/s (or around 4 times faster).

- The data transfer path is much faster with the RISC SCSI-2 controller. It is able to read from or write to system memory 32 bits at a time, taking 150ns per read or write. The AM-522 transfers data 16 bits at a time, taking 210ns per 16 bit transfer.

B.2 READ AHEAD

The AM-540's SCSI disk driver, SCZ190.DVR, is able to perform read-ahead directly into AMOS disk cache. When any program attempts to read a physical block from a disk, the SCZ190 driver will also read up to an additional seven sequential blocks from the disk drive and store these read-ahead blocks in the cache.

This read-ahead scheme works very well when jobs on the system are doing a large number of sequential reads. For example, data base searches and programs like REDALL execute much faster because the data they require is already in memory and only has to be transferred from the cache into the user partition.

Programs that do significant random disk access (such as RNDRED) tend to slow down with this read ahead scheme. Most of the slow down is caused by "thrashing" of the cache, where cache entries that will be used again are removed from the cache due to the allocation requirements of the read-ahead blocks (which typically are never used). The actual data transfer overhead is very little, as most SCSI disk drives (especially fast SCSI-2 drives) have a track cache built into the drive allowing both the target and read ahead blocks to be transferred over the SCSI cable without delay.

B.2.1 Controlling Read-Ahead

In order for read-ahead to occur on the AM-540, the AMOS disk cache, DCACHE.SYS, must be installed as normal and additionally, the full SCSI dispatcher (SCZ190.SYS) must also be installed. The number of read-ahead blocks to be transferred into cache on **every** physical disk access is controlled by the FIXLOG program.

When you use FIXLOG to create a driver for the AM-540 board, a new option will appear, which is the number of read-ahead blocks. For example, type:

```
FIXLOG RETURN

FIXLOG.LIT Version x.x(xxx)

1. Change the number of logicals
2. Create a sub-system driver

Enter choice: 2 RETURN

Enter name of generic driver to be used: SCZ190 RETURN
Enter number of logical units per physical unit: 10 RETURN
Enter SCSI id (0-6): 0 RETURN
Enter number of read-ahead blocks (0-7): 5 RETURN
Enter new driver name: MAX RETURN
New driver is now in memory.
```

To save the driver you have created, type:

```
SAVE MAX.DVR RETURN
```

If you wish to disable or change the number of read-ahead blocks, simply use the FIXLOG program to generate a new disk driver and if the disk driver is for the DSK: device, don't forget to use MONGEN and embed the new driver into the system monitor.

The generic driver AM-540 SCSI disk driver (SCZ190.DVR) is setup for seven read-ahead blocks.

B.3 WRITE BUFFERING

AMOS (and therefore every application written for AMOS) understands only 512 byte disk blocks. Therefore, when a disk write request is made by a program, a single block transfer is made to the disk drive. If the program then writes the next sequential block, the system must wait the latency time of the drive (i.e., the time it takes the drive to complete one revolution) before the next block can be written. Latency even on fast SCSI-2 drives is around 7ms.

In order to speed up the write process, when write buffering is enabled, all writes to the SCSI disk are first transferred into a buffer. If the write buffer becomes at least half full, or around three quarters of a second passes with no reads, or if a preset "guaranteed flush" timeout occurs, the SCZ190.DVR disk driver will begin scanning through the write buffer, finding blocks that need to be written out to the drive. The algorithm used to flush blocks out to the drive is able to find up to eight consecutive blocks and write them to the disk drive as a single write command, therefore dramatically improving system performance.

Another benefit of write buffering is it tends to eliminate duplicate disk writes, such as bitmap updates during operations such as copying files and tape restores and prevents head thrashing when reading through random access data files and writing a sequential file out to the disk (as most report generation programs do).

B.3.1 Potential Pitfalls

Obviously, there can be problems with write buffering, especially if either the system crashes or is powered off while writes are pending in the write buffer. If either of these two cases occur, all pending writes will be lost. Though this sounds like a major problem, it can also happen if write buffering is not enabled. However, write buffering increases the number of writes at risk.

To help reduce the possibility of data loss, certain safeguards have been put in place. Writes are not buffered indefinitely; they are performed whenever the device is not performing reads. Even if the drive is busy with read requests, the buffer is still periodically flushed, based on a user definable "absolute flush time." In addition, if you have a power failure and the UPS status port senses a low battery condition, the UPS interface allows AMOS to flush and disable the write buffer in preparation for a system shutdown. Also, the MONTST command automatically flushes the write buffer.

The primary write buffering risks are an errant software operation or a hardware failure that causes a system crash.

Therefore, you must weigh the potential for data loss (which is always there) versus the dramatic performance increase seen when using write buffering. If you are worried about the reliability of write buffering, it may be worth keeping in mind that the AM-522 disk controller has always used write buffering on a track-by-track basis (not quite as efficiently as the AM-540 write buffering scheme however). The SMARTDRV program that comes with MS-DOS 5.0 does write buffering (you may have noticed the "Waiting for system shutdown" message when re-booting a PC with CTRL-ALT-DELETE) and Unix based computers have always done it.

B.3.2 Setting Up Write Buffering

In order to enable write buffering, you must be using the full SCSI dispatcher (SCZ190.SYS). Write buffering is enabled by adding parameters to the SYSTEM statement used to load the driver. All hard disk subsystem drivers for the AM-540 SCSI interface must be loaded into system memory. Appending "/N" followed by the buffer-size and flush-period will enable write buffering for that device. For example:

```
SYSTEM DVR:devn/N buffer-size flush-period
```

where devn is the device you want to enable write buffering for (for example DSK and SUB).

One SYSTEM command is required for each different SCSI disk driver present in the system. For example, if you had two 1.2GB SCSI-2 drives named as DSK0-36 and DSK37-73 and one 540MB SCSI-2 drive named SUB0-17, you would need one additional SYSTEM command for the DSK device (although it's really two physical drives) and one additional SYSTEM command for the SUB device.

When specifying write buffering for a device, two files are loaded into system memory: .DVR and .WRC, which are the driver and cache buffer. This is true for all SCSI disk devices except the DSK device. For the DSK device, the file DSK.DVR does not need to be created because it is already loaded into the system monitor. Therefore, for the DSK device, only the file DSK.WRC will be loaded into system memory.

The buffer-size is the size of the write buffer (you specify the size in Kilobytes). Specifying a buffer size of over 100K is unlikely to improve performance.

The flush-period is the absolute maximum number of seconds data may be left in the write buffer without being written to the disk. For example, if you specified 30, you would know that after 30 seconds any pending writes would be written to the disk. This is true even if the disk is constantly busy servicing reads.

In the three drive example mentioned earlier, the added SYSTEM commands would look similiar to this:

```
SYSTEM DVR:DSK/N 100K 60  ;Driver in AMOS will create DSK.WRC
SYSTEM DVR:SUB/N 100K 60  ;Load SUB.DVR and create SUB.WRC
```

This would setup 100K of write buffering for the DSK devices and 100K of write buffering for the SUB device. All three drives would have their write buffers flushed every minute (or sooner if the drives are not busy with read requests).

B.4 FINAL NOTES

Both read-ahead and write buffering schemes used on the AM-540 board dramatically improve system performance in our lab tests. Both schemes are fine tuned for both the 68030 processor and RISC SCSI controller and do not take cycles away from AMOS like other commercially available disk optimization software.

Although our lab tests attempt to simulate the "real world" of user applications, they probably use the resources of the AM-540 SCSI sub-system completely differently than your application does, therefore we highly recommend you experiment with both cache and write buffer sizes, read-ahead blocks and flush periods on an installed system to find the best possible combination for that system.